REAR AXLE SHAFT

SA0B8–04

COMPONENTS

HINT:
Pre runner is the model described below.
RZN191L–TRPDKAB, RZN196L–CRPDKAB, PZN196L–PRPDKAB, VZN195L–CRPDKAB, VZN195L–PRPDKAB

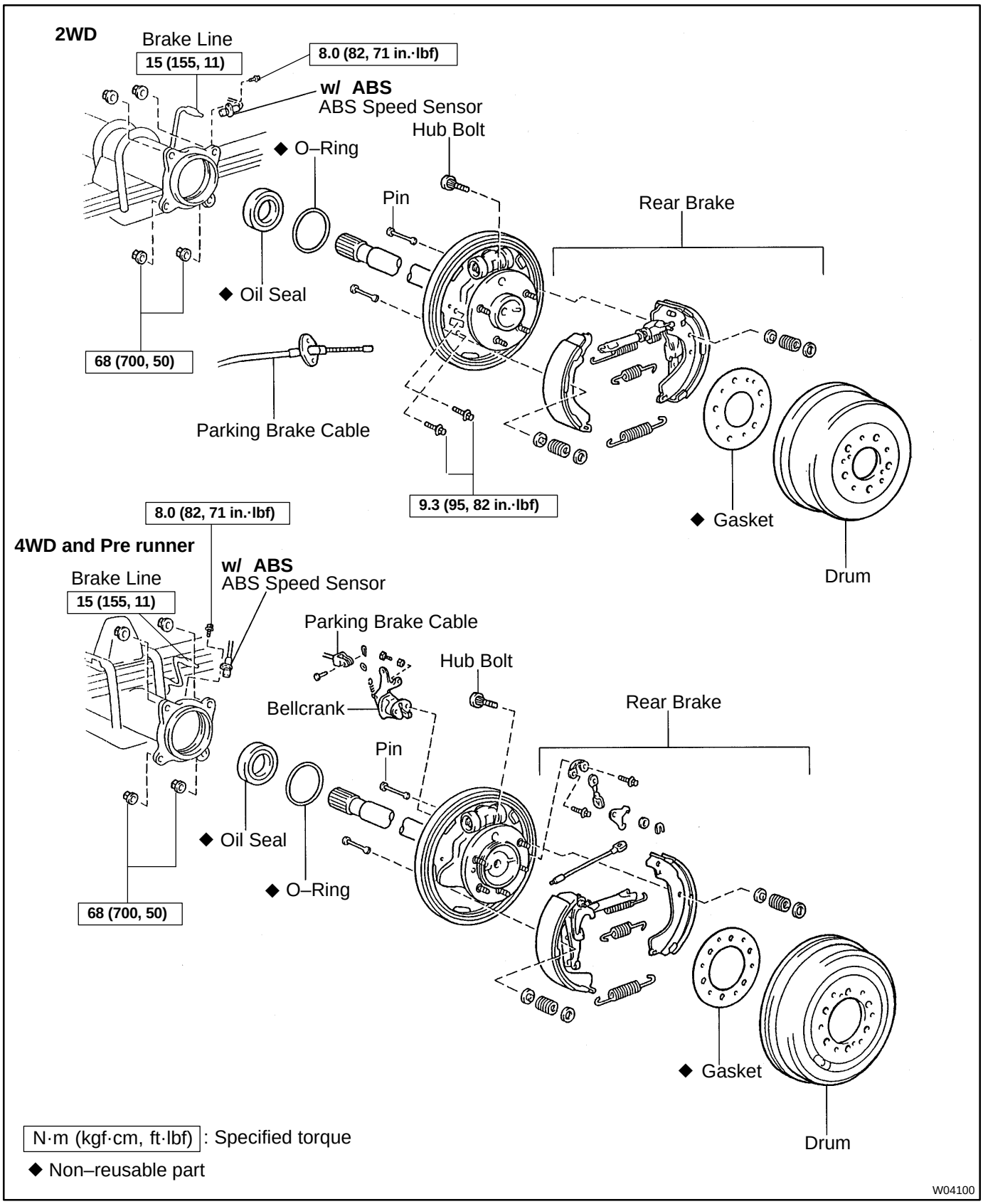
2WD
Brake Line
15 (155, 11)
8.0 (82, 71 in.·lbf)
w/ ABS
ABS Speed Sensor
Hub Bolt
◆ O–Ring
Pin
Rear Brake
◆ Oil Seal
68 (700, 50)
Parking Brake Cable
9.3 (95, 82 in.·lbf)
◆ Gasket
Drum
4WD and Pre runner
8.0 (82, 71 in.·lbf)
w/ ABS
ABS Speed Sensor
Brake Line
15 (155, 11)
Parking Brake Cable
Hub Bolt
Bellcrank
Rear Brake
Pin
◆ Oil Seal
◆ O–Ring
68 (700, 50)
◆ Gasket
Drum
N·m (kgf·cm, ft·lbf) : Specified torque
◆ Non–reusable part
W04100

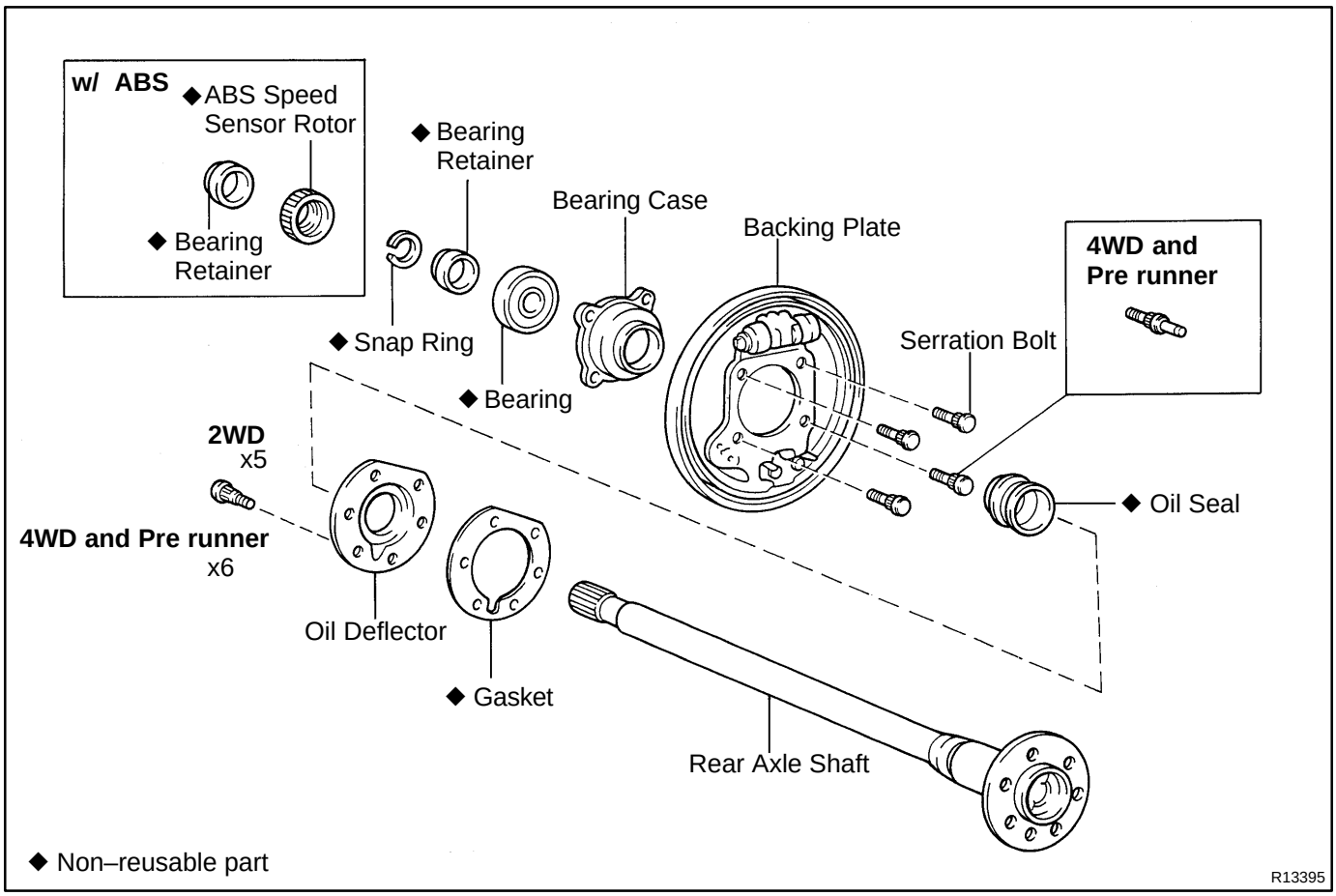
w/ ABS
◆ABS Speed Sensor Rotor
◆ Bearing Retainer
◆ Bearing Retainer
◆ Snap Ring
◆ Bearing Retainer
Bearing Case
Backing Plate
4WD and Pre runner
Serration Bolt
◆ Bearing
2WD x5
4WD and Pre runner x6
◆ Oil Seal
Oil Deflector
◆ Gasket
Rear Axle Shaft
◆ Non–reusable part
R13395